ISSN 1070-3632, Russian Journal of General Chemistry, 2013, Vol. 83, No. 1, pp. 157–163. © Pleiades Publishing, Ltd., 2013.
Original Russian Text © B.L. Gorberg, A.A. Ivanov, O.V. Mamontov, V.A. Stegnin, V.A. Titov, 2011, published in Rossiiskii Khimicheskii Zhurnal, 2011, Vol. 55, No. 3, pp. 7–13.

Modification of Textile Materials by the Deposition of Nanocoatings by Magnetron Ion-Plasma Sputtering

B. L. Gorberg[a], A. A. Ivanov[a], O. V. Mamontov[b], V. A. Stegnin[a], and V. A. Titov[a]

[a] *Ivanovo State University of Chemistry and Technology, pr. F. Engel'sa 7, Ivanovo, 153000 Russia*
e-mail: Gorberg@isuct.ru, titov@isuct.ru

[b] *Ivtekhnomash, Ivanovo, Russia*

Received July 21, 2011

Abstract—Possibilities of surface modification of textile materials and polymer films by the deposition of nano-coatings using magnetron ion-plasma sputtering are considered. Technical characteristics of the new industrial equipment for these processes are presented. Examples of materials thus produced are given and the prospects of the new technology are discussed.

DOI: 10.1134/S1070363213010350

INTRODUCTION

Expansion of the application field of textile materials is associated with the demand for new properties which are not always provided by traditional processing technologies. Some specific properties are required to be imparted to a thin surface layer of a textile material, leaving intact its bulk characteristics. Many such tasks are solved by means of plasma-chemical treatment, which changes the composition and structure of a thin surface layer of the material and thus affects the wettability, adhesiveness, bio-compatibility, and other surface characteristics [1–5].

An efficient method of surface modification of textile and polymer film materials is the deposition of nanolayers of metals or metal compounds. Among layer deposition technologies, a particular place belongs to magnetron sputtering which is applied for the fabrication of microelectronic devices, as well as for the deposition of decorative and protective surface coatings on metals, ceramics, glass, and plastics [6].

Plasma-Chemical Treatment of Textile Materials: Principles and Advantages

Until present magnetron sputtering has not been used for surface modification of textile materials because of the specific features of textiles as objects for ion-plasma treatment. There are problems, both scientific and engineering, to be solved to implement this method in the textile industry. Let us dwell on some of them.

Fiber-forming polymer materials generally have a low surface energy and, as a consequence, low adhesion characteristics. For a better adhesion of coatings to the polymer wafer, preactivation of the surface is required.

One more problem is associated with the fact that treatment of textile materials in a low-pressure plasma is accompanied by vigorous release of gaseous products of plasma reaction with polymers, which occurs as a result of removal of adsorbed water. This circumstance poses special requirements on the vacuum equipment and process regime.

In view of the lack of experience with the ion-plasma metal deposition on textile materials, which possess a porous structure, it is necessary to gain insight into the regularities of plasma reaction with such materials. In particular, it is to be found out how the properties of the resulting coatings depend not тonly on the deposition conditions and the chemical nature of the fiber-forming polymer, but also on the specific features of the textile material.

The practice shows that magnetron sputtering deposition is well combined with plasma-chemical surface activation, and these processes can be incorporated into a single process cycle in a single industrial installation [7].

Figure 1 shows a schematics of a magnetron sputtering system. Its principal elements are a cathode

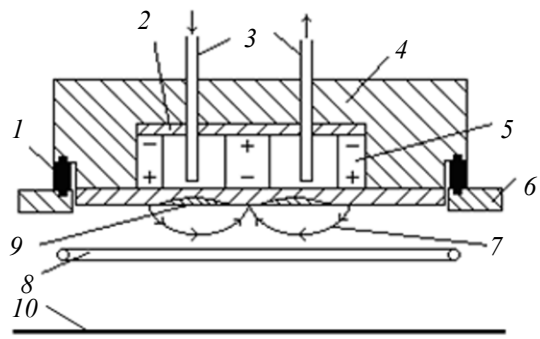

Fig. 1. Schematic design of a magnetron sputtering system with a flat cathode plate: (*1*) insulator; (*2*) magnetic circuit; (*3*) cooling system; (*4*) cathode housing; (*5*) constant magnet; (*6*) vacuum chamber wall; (*7*) magnetic field force lines; (*8*) annular water-cooled anode; (*9*) cathode sputtering erosion zone; and (*10*) substrate surface.

made of a material to be sputtered, an anode, and magnetic and cooling systems.

In magnetron sputtering systems, a subnormal glow discharge arises in the crossed electrical and magnetic fields. The electrons ejected from the cathode (target) under ion bombardment move around magnetic force lines. This increases the frequency of electron collisions with working gas atoms. As a result, the ionization degree of the gas and the ion current on the surface of the sputtered cathode sharply increase (about two orders of magnitude compared with diode sputtering systems without magnetic field), thus sharply increasing the sputtering rate. The ionization frequency can be increased by superimposing an external magnetic field, which allows to reduce the pressure of the plasma-forming gas and to enhance transport of the sputtered compound to the wafer (textile material) due to a reduction of its scattering caused by collisions with gas molecules.

Magnetron sputtering offers the following advantages:

– versatility, possibility to obtain films of metals, alloys, semiconductors, and dielectrics;

– a high rate of sputter deposition and possibility to vary the deposition rate over a wide range;

– retention of the ratio of main components on sputtering of complex composition compounds;

– high purity of the resulting coatings and their good adhesion to the wafer;

– possibility to vary the structure and properties by varying the discharge power, as well as the pressure and composition of the gas medium;

– weaker, compared with diode sputtering, radiation and heat exposure of treated materials;

– possibility to perform the process in a chemically active medium, which makes it possible to obtain nitride oxide, and other films;

– higher energy efficiency of the process compared with conventional diode and triode sputtering systems;

– possibility to construct semicontinuous process lines, as the targets have a sufficiently large quantity of the material.

As mentioned above, at present magnetic sputtering is mainly used for the fabrication of electronic devices. The deposition on film polymer wafers of layers possessing a high electrical conductivity and a good adhesion is actively used in the production of flexible printed circuits from poly(ethylene terephthalate), poly (tetrafluoroethylene), and polyimide [8–10].

In view of the development of organic polymer light-emitting diodes and flexible displays, much attention is being paid to deposition of transparent electrically conductive films on polymer wafers. The films are produced from indium and tin oxides (ITO) or zinc oxide, including that doped with aluminum or gallium. Along with electron-beam ablation, reactive magnetron metal sputtering in the oxygen-containing plasma or MW magnetron sputtering of specially prepared targets are used [11–18].

The laboratory of ion-plasma processes of the Ivanovo State University of Chemistry and Technology (ISUCT) together with Ivtekhnomash has performed an extensive R&D work on the use of magnetron sputtering for modifying textile materials [19–25]. Influence of process parameters (discharge current, composition and pressure of plasma-forming gas) and wafer material on the rate of metal sputter deposition, as well as on the composition and properties of coatings. Aluminum, titanium, copper, silver, stainless-steel, brass, and bronze surface nanocoatings on textile materials, synthetic leathers, or polymer films were obtained [19–21].

Conditions of titanium sputtering, which allow titanium nitride films to be deposited on textile materials in a mixture of argon with nitrogen and titanium oxide films, in a mixture of argon with oxygen, were found [21].

According to electron scanning microscopy and atomic-force microscopy data, by varying sputtering

Table 1. Commercial equipment for plasma-chemical treatment of textile materials

Development period	Model	Consumers	Fabric width, cm
1985–1986	UPX-140	Varentsova weaving and finishing factory (Big Ivanovo Manufactury)	140
1988– 1989	LPX-180Ш	Pavlovo Posad Shawl Manufactory	180
1989– 1994	KPR-180	Pavlovo Posad Shawl Manufactory	180
1988	UPH-40	IREDEI, Ivanovo	40
1994	KPR-180/1	Mascioni S.p.A. weaving and finishing factory, Italy	180
1995– 1996	KPR-270	SAATI S.p.A. textile enterprise, Italy	260
2000	KPR-200	Baiksan textile enterprise, South Korea	200
2000	KPR-50	R&D Textile Center, South Korea	50
2002	KPR-180	Institute of Polymers, CAS, China	180
2002	KPR-50	Institute of Polymers, CAS, China	50
2010	KPR-200	Mectex S.p.A. textile factory, Italy	200

parameters one can vary the coating thickness from a few nanometers to several tens of nanometers. The coatings have a fine grain structure, with the average grain size of 20–30 nm. The average roughness on initially smooth wafers is no more than a few nanometers.

Thus, varying the composition of the plasma-forming gas, sputtered material, and sputtering rate makes it possible to obtain coatings of different thicknesses and different chemical and phase compositions, thus opening the way to control coating characteristics.

Titanium nitride films form gold-colored metallic coatings on textile materials, which can be used to create decorative protective fabrics. Titanium oxide thin films are interference-colored from blue to nacre. Moreover, film coatings impart catalytic activity to the surface of various materials. Novel aluminum-, copper-, and stainless-steel-coated thermal reflective and electrically conductive materials shielding electromagnetic radiation were developed.

Poly(tetrafluoroethylene) coatings obtained by MW magnetron sputtering render textile materials waterproof [24].

Machine for Plasma-Chemical Treatment and Deposition of Nanocoatings on Textile and Polymer Film Materials

One of the main factors preventing the wide commercialization of the magnetron sputtering process for metallization of textile materials is that this process requires a high-vacuum equipment which is difficult to manufacture. Since 1985, the Ivanovo Research Experimental and Design Engineering Institute (IREDEI) has been developing commercial installations and lines for low-pressure plasma treatment of textiles and polymer films. This equipment is used to success at Russian and foreign enterprises for imparting a better hydrophilicity, dyeability, and adhesiveness to textiles (Table 1). The technical characteristics of the plasma-chemical installations and examples of their application for modification of textile materials are reported in [1–5].

The experience in the design and exploitation of such installations was employed in the development of a new commercial equipment for modifying textiles, nonwoven materials, synthetic leathers, and polymer films by magnetron sputter deposition of nanocoatings. In 2005, the joint effort of the Laboratory of Ion-Plasma Processes of the ISUCT and Ivtekhnomash resulted in the development of a UMN-180 magnetron sputtering machine (Fig. 2). A further modification was a MM-180 machine which has a higher performance and automation level. The principal technical characteristics of this equipment are listed in Table 2.

The UMN-180 machine is equipped with two 2088-mm-long magnetron sputtering units which allow uniform-thickness coatings to be deposited with an

Table 2. Technical characteristics of the UMN-180 and MM-180 magnetic sputtering machines

Parameter	UMN-180	MM-180
Working width, mm	1800	1800
Maximum diameter of рулона, мм	700	700
Vacuum chamber volume, m^3	15	15
Number of magnetrons	2	4
Working pressure, mm	$(0.5–3)\times10^{-3}$	$(0.5–3)\times10^{-3}$
Discharge current (for one magnetron), A	1–25	1–25
Material motion speed, m/min	0–20	0–40
Performance[a], m/month	2000–21000	7000–41000

[a] The performance of the machine depends on the sputtered metal and on the textile material or film.

accuracy of no worse than ±10% on fabrics up to 180 cm in width. The two-step vacuum system evacuates air from the working chamber loaded with a roll of fabric or film (residual pressure 5×10^{-5} mm). The accuracy of maintaining the flow and pressure of the working gas (or gas mixture) during treatment is ±5%. The machine is equipped with auxiliary cooled electrodes to excite glow discharge with the aim of activating the surface before coating deposition. The drawing system uniformly pulls the material through the plasma treatment and coating deposition zone at a rate of 20 m/min and is adapted both for textile fabrics and for films and sheet materials, with a thickness varied from 12 μm to 5–7 mm.

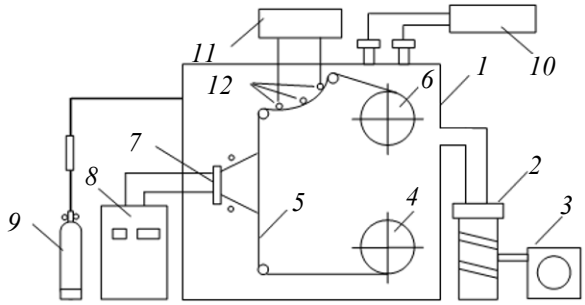

Fig. 2. Schematic pump of the UMN-180 magnetron sputtering machine: (*1*) vacuum chamber; (*2*) diffusion pump; (*3*) forevacuum pump; (*4*) crusher roll; (*5*) treated material; (*6*) distributor roll; (*7*) magnetron; (*8*) magnetron power supply unit; (*9*) argon inlet system; (*10*) gas inlet system; (*11*) power supply unit for the glow discharge electrodes; and (*12*) electrode system.

Textile Materials Produced Using Magnetron Sputtering

Decorative and Clothing Textiles. New clothing textiles and synthetic leathers, as well as decorative interior textiles with metallic-type coatings have been created. The base materials are generally silk and polyether fabrics, etc. (the pictures of metallized materials and articles of them can be found at http://ivtechnomash.ru/).

Textiles with titanium nitride or titanium oxide coatings have a wide range of colors, which, among other reasons, with light interference in thin films.

Metallized coatings on textiles, subjected to pretreatment and containing no size and lubricant residues, exhibit a good resistance to laundering, dry friction, and wet wiping. Plasma-chemical surface preactivation enhances adhesion of metal nanofilms to textile materials by a factor of 2–3.

A great interest in the new materials was exhibited by Nina Ricci (France). This couture house produced some hundreds of meters of metallized fabrics (silk, polyether) which were in models for the collections Spring–Summer 2008 and Spring–Summer 2009.

Metallized textiles and synthetic leathers can be used in interior decoration. For example, sun curtains of an aluminum-coated polyether fabric are not only good-looking, but also demonstrate a high reflective power in the IR range, thus serving for reduced energy consumption for interior conditioning in hot days.

Medical textile materials. Development of medical textile materials is the most dynamically progressing field of textile industry. Medical textile materials with embedded carbon nanotubes and silver and other metal nanoparticles have recently been created. As known, silver-containing preparations exhibit bactericide, antiviral, and expressed antifungal and antiseptic effects and serve as an effective antiseptic against pathogens causing acute infectious diseases [26, 27].

The potential of medical applications of magnetron sputtering was demonstrated in [19, 28, 29]. Thus, Chen et al. [28] synthesized a polyethylene oxide composite material with embedded silver nanoparticles (characteristic sizes 5–10 nm). Kaczorowsky et al. [29] used magnetron sputtering for carbon film deposition on the surface of polyurethane to improve the biocompatibility of the polyurethane fiber.

The Laboratory of Ion-Plasma Processes of the ISUCT developed a production technology for new

Fig. 3. Medical silver-coated gauze cloth.

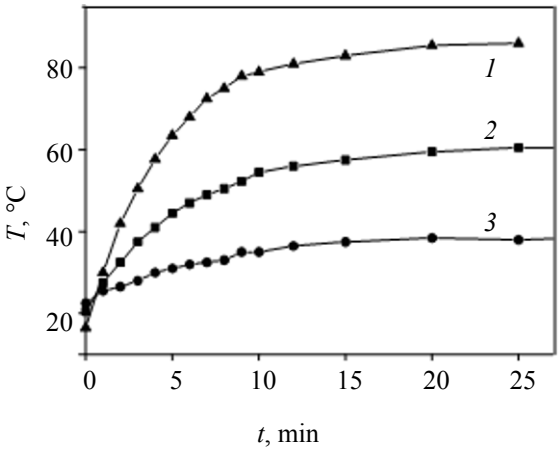

Fig. 4. Temperature of a smoked metal plate as a function of the duration of exposure to IR radiation: (*1*) no screen; (*2*) screen of a polyether fabric; and (*3*) screen of an aluminum-coated polyether fabric.

medical materials, specifically gauze and cloths with silver nanolayers deposited by magnetron sputtering (Fig. 3) [19]. These materials have already passed clinical trials in treatment of patients at the Chair of General Surgery of the Pediatric Department of the Russian State Medical University, the Department of Purulent Surgery of the Filatov City Clinical Hospital no. 15 under the Moscow Department of Public Health, and the Clinics of General Surgery, Anesthesia, and Critical and Emergency Care of the Ivanovo State Medical Academy. The cloths were applied to purulent postsurgical wounds, infected wounds, bed sores, and trophic ulcers. It was found that the cloths with embedded silver nanolayers strongly inhibit exudation processes, accelerate sloughing, reduce tissue inflammation and edemas, and promote would cleansing. The cloths show good hydroscopic properties and cause no damage or irritation in tissues surrounding the wound. The research at the Vishnevskii Institute of Surgery provided evidence for the pronounced antimicrobial activity of materials with silver nanocoatings, which gave ground to recommend them to be used for drying the surgery field in patients with a high risk of infection of the surgical wound, as well as for treating infected wounds.

The Russian Public Health Surveillance Agency approved the medical gauze and cloths with silver nanocoatings for production, sale, and application in the Russian Federation.

An important advantage of magnetron sputtering is that the rate of this process allows fine control, which makes possible precise dosing and highly uniform surface metal distribution on the textile material. The developed domestic medical products, while not ranking below foreign analogs in quality, have a lower cost and are able to reduce considerably the share of imported products at the Russian market. Moreover, the shelf-life of medical cloths with silver nanocoatings is much longer compared with bandages with antibiotic ointments.

The possibility of economic and controlled deposition of silver on fabrics allows the application filed of the magnetron sputtering technology to be extended to the fabrication of materials not only for medical purposed, but also for cosmetology and hygiene.

Electrically conductive and radiation protective textile materials. Metallized fabrics conduct electricity, and, as a result, exhibit antistatic properties. Such materials can be used in spark-proof filters for explosion- and fire-hazardous industries (coal mining, wood processing, food production). Unlike other metallization technologies, magnetic sputtering makes possible a fairly fine and reproducible control of the electrical conductivity of the metal film.

Fabrics with surface electrical conductivity are promising candidates for the development of materials protecting against electromagnetic radiation over a wide frequency range, as well as light, strong, durable, and decoratively attractive radiation protective textile materials.

Thermal reflective materials. Thin metal coatings enhance the ability of textile material to reflect heat. As seen from Fig. 4, a smoked metal plate shielded from IR radiation (250 W) with a screen made of an alumina-metallized polyether fabric heats up to 30°C for 25 min. Under the same conditions, the same object shielded with an uncoated fabric heats up 56°C and an unshielded object, to 83°C.

Thin metal coatings show a good adhesion to textile materials and do not affect their air and steam permeability. This opens up wide possibilities for the use of metallized fabrics to fabricate the protective clothing for personnel working under increased thermal load (steelworkers, fire fighters), as well as a comfort heat-retaining clothing for working at low temperatures.

Biologically and catalytically active materials. As shown in [30, 31], a glass fiber material with a TiO_2 coating deposited by magnetron sputtering catalyzes the plasma-chemical destruction of phenol in aqueous solutions. The experiments were performed both with model aqueous phenol solutions and industrial wastewater. It was found that the concentration of phenol in the solution after combined plasma and catalytic treatment decreases almost 50 times.

Of undeniable interest is the metal sputter deposition on polymer wafers of metal complexes of tetrapyrrole compounds, in particular, porphyrins and their analogs. This opens up wide possibilities for the development of new-generation materials which can find application in catalytsis, membrane technologies, as well as sensors, medical preparations, etc. [32–35]. Experimental evidence was obtained to show that tetra-*p*-methoxyphenylporphyrin and its zinc, copper, and cobalt complexes can be deposited on a poly (ethylene terephthalate) film by magnetron sputtering. However, the resulting material is not sufficiently stable, if the film surface is not pretreated: Loosely fixed layers are lost during exploitation. To obtain a more stable material, a technology was developed, involving metal sputter deposition of a TiO_2 film and treatment of the resulting surface with a metal porphyrin solution, followed by washing of the sample [25].

CONCLUSIONS

The technology of surface modification by the deposition of nanofilms of metals and their compounds by magnetron sputtering is environmentally friendly, since all processes are performed in a vacuum without chemical reagents. The cooling water is not contaminated and can be used for general duties or in a closed cooling cycle.

The equipment was put into operation in 2005, and since this time about 400 thsd m^2 of metallized fabrics and films for diverse applications have been fabricated. The textile and film materials fabricated by the developed technology possess unique properties and are competitive not only on the Russian, but also on the international market.

REFERENCES

1. Kutepov, A.M., Zakharov A.G., and Maksimov, A.I., *Vakuumno-plazmennoe i plazmenno-rastvornoe modifitsirovanie polimernykh materialov* (Vacuum-Plasma and Plasma-Solution Modification of Polymer Materials), Moscow: Nauka, 2004.
2. Maksimov, A.I., Gorberg, B.L., and Titov, V.A., *Tekst. Khim*., 1992, no. 1, pp. 101–117.
3. Maximov A.I., Gorberg, B.L., and Titov, V.A., *Textile Chemistry —Theory, Technology, Equipment*, Morygan-ov, A.P., Ed., New-York: NOVA Science, 1997, pp. 225–245.
4. Kutepov, A.M., Zakharov, A.G., Maksimov, A.I., and Titov, V.A., *Ross. Khim. Zh. (Zh. Ross. Khim. O–va im. D.I. Mendeleeva)*, 2002, vol. 46, no. 1, pp. 103–115.
5. Gorberg, B.L., *Tekst. Khim*., 2003, no. 1, pp. 59–68.
6. Lipin, Yu.V,, Rogachev, A.V., and Kharitonov, V.V., *Vakuumnaya metallizaciya polimernykh materialov* (Vacuum Metallization of Polymer Materials), Leningrad: Khimiya, 1987.
7. Gorberg, B.L., Ivanov, A.A., Mamontov O.V., and Stegnin, V.A., RF Patent no. 2398045, *Byull. Izobret*., no. 24, 2010.
8. Vorob'ev, Z.N., Ushanova, L.N., and Vishnyakova, E.P., *Tekhnol. Konstr. Elektron. Apparat*., 1993, no. 2, pp. 47–50.
9. Aleksandrova, L.G., *Ibid*., 1995, no. 1, pp. 28–31.
10. Trofimenko, K.A., Sleptsov, V.V., and Dantsiger, M., *Materialy 5-i mezhdunarodnoi konferentsii "Vakuumnye tekhnologii i oborudovanie"* (Proc. 5th Int. Conf. "Vacuum technologies and Equipment"), Kharkov: Kontrast, 2002, pp. 264–266.
11. Pal, E., Seemann, T., Zollmer, V., Busse, M., and Dekany, I., *Colloid Polym. Sci*., 2009, vol. 287, pp. 481–485.

12. Xiaotao, H., Jin, M., Honglei, M., Maohua, T., Baocheng, C., Lina, Y., Chuanfu, C. and Shuyun, T., *Sci. China*, 2002, vol. 45, no. 3, pp. 394–399.
13. Minami, T., Oohashi, K., and Takata, S., *Thin Solid Films*, 1990, vol. 193/194, pp. 721–729.
14. Mohamed, S.H., El-Hossary, F.M., Gamal, G.A., and Kahlid, M.M., *Acta Phis. Pol. A*, 2009, vol. 115, no. 3, pp. 704–708.
15. Wang L.M., Chen, Y.-J., and Liao, J.-W., *J. Phys. Chem. Solids*, 2008, vol. 69, pp. 527–530.
16. Zhang, K. Zhu, K., Huan, C.H.A., and Wee, A.T.S., *Thin Solid Films*, 2000, vol. 376, no. 1–2, pp. 255–263.
17. Lee, J., Jung, H., Lee, J., Lim, D., Yang, K., Yi, J., and Song, W.-C., *Thin Solid Films*, 2008, vol. 516, no. 7, pp. 1634–1639.
18. Fortunato, E., Goncalves, A., Assuncao, V., Marques, A., Aguas, H., Pereira, L., Ferreira, I., and Martins, R., *Thin Solid Films*, 2003, vol. 442, pp. 1215–126.
19. Gorberg, B.L., Ivanov, A.A., Mamontov, O.V., Stegnin, V.A., and Titov, V.A., *Sbornik trudov VI Mezhdunarodnogo simpoziuma po teoreticheskoi i prikladnoi plazmokhimii: sbornik trudov* (Proc. VI Int. Symp. On Theoretical and Applied Plasma Chemistry), Ivanovo: Ivanov. Gos. Khim.-Tekhnol. Univ., 2011, pp. 24–25.
20. Gorberg, B.L., Ivanov, A.A., Stegnin, VA., Rybkin, V.V., and Titov, V.A., Abstracts of Papers, *1 Mezhdunarodnaya nauchno-prakticheskaya konferentsiya "Nanotehnologii v industrii tekstilya"* (1st Int. Scientific and Practical Conf. "Nanotechnologies in the Textile Industry"), Moscow: Mosk. Gos. Tekstil. Univ. im. A.N. Kosygina, 2006, pp. 27–32.
21. Gorberg, B.L., Ivanov, A.A., Rybkin, V.V., and Titov, V.A., *Issledovaniya i razrabotki v oblasti nanotekhnologii* (Research and Development in the Field of Nanotechnology), Svetsov, V.I., Ed., Ivanovo: Ivanov. Gos. Khim.-Tekhnol. Univ., 2009, pp. 163–167.
22. Gorberg, B.L., Ivanov, A.A. Stegnin, V.A., and Mamontov, O.V., *Sbornik trudov V Mezhdunarodnogo simpoziuma po teoreticheskoi i prikladnoi plazmokhimii* (Proc. V Int. Symp. on Theoretical and Applied Plasma Chemistry), Ivanovo: Ivanov. Gos. Khim.-Tekhnol. Univ., 2008, vol. 2, p. 581.
23. Gorberg, B.L., Ivanov, A.A.,Stegnin, V.A., and Mamontov, O.V., Abstracts of Papers, *III Mezhdunar. nauchno-tekhnicheskoi konf. "Tekstil'naya khimiya-2008"* (III Int. Scientific and Technical Conf. "Textile Chemistry 2008"), Ivanovo, December 9–11, 2008.
24. Kumeeva, T.Yu., Gorberg, B.L., and Prorokova, N.P., *Ibid.*
25. Koifman, O.I., Gorberg, B.L., Ageeva, T.A., Rybkin, V.V., Ivanov, A.A., Alopina, E.V., and Titov, V.A., Abstracts of Papers, *35th Inorganic Reaction Mechanisms Meeting (IRMM-35),* Krakov, January 4–7, 2006, p. 18.
26. Nadtochenko, V.V., Radtsig, M.A., and Khmel', I.A., *Ross. Nanotekhnol*., 2010, vol. 5, nos. 5–6, pp. 37–46.
27. Korchak, G.I., Surmasheva, O.V., Skorokhod, I.M., and Mikhienkova, G.I., *Farm. Zh*., 2006, no. 5, pp. 45-57.
28. Chen, Q., Zhou, M., Fu, Y., Weng, J., Zhang, Y., Yue, L., Xie, F., and Huo, Ch., *Surf. Coat. Technol*., 2008, vol. 202, pp. 5576–5578.
29. Kaczorowsky, W., Batory, D., and Niedselski, P., *J. Achiev. Mater. Manufact. Eng.,* 2009, vol. 37, no. 2, pp. 286–291.
30. Bubnov, A.G., Grinevich, V.I., Kvitkova, E.Yu., and Rybkin, V.V., *Khim. Neftekhim.: Prilozh. Zh. Ekol. Proizv*., 2008, no. 3, pp. 5–7.
31. Bubnov, A.G., *Doctoral (Chem.) Dissertation*, Ivanovo, 2010.
32. Koifman, O. I. and Ageeva, T.A., *Porfirinpolimery* (Porphyrin Polymers), Moscow: Izd. Fiz.-Mat. Literatury, 2006.
33. Syrbu, S.A., Ageeva, T.A., Semeikin, A.S., and Koifman, O.I., *Izv. Akad. Nauk, Ser. Khim*., 2007, vol. 56, no. 4, p. 680.
34. Ageeva, T.A., Syrbu, S.A., and Koifman, O.I., *Makrogeterotsikly,* 2009, vol. 2, no. 2, p. 139.
35. Koifman, O.I. and Ageeva, T.A., *Ross. Khim. Zh. (Zh. Ross. Khim. O–va im. D.I. Mendeleeva)*, 2004, vol. 48, no. 6, pp. 140–153.